PX-317S

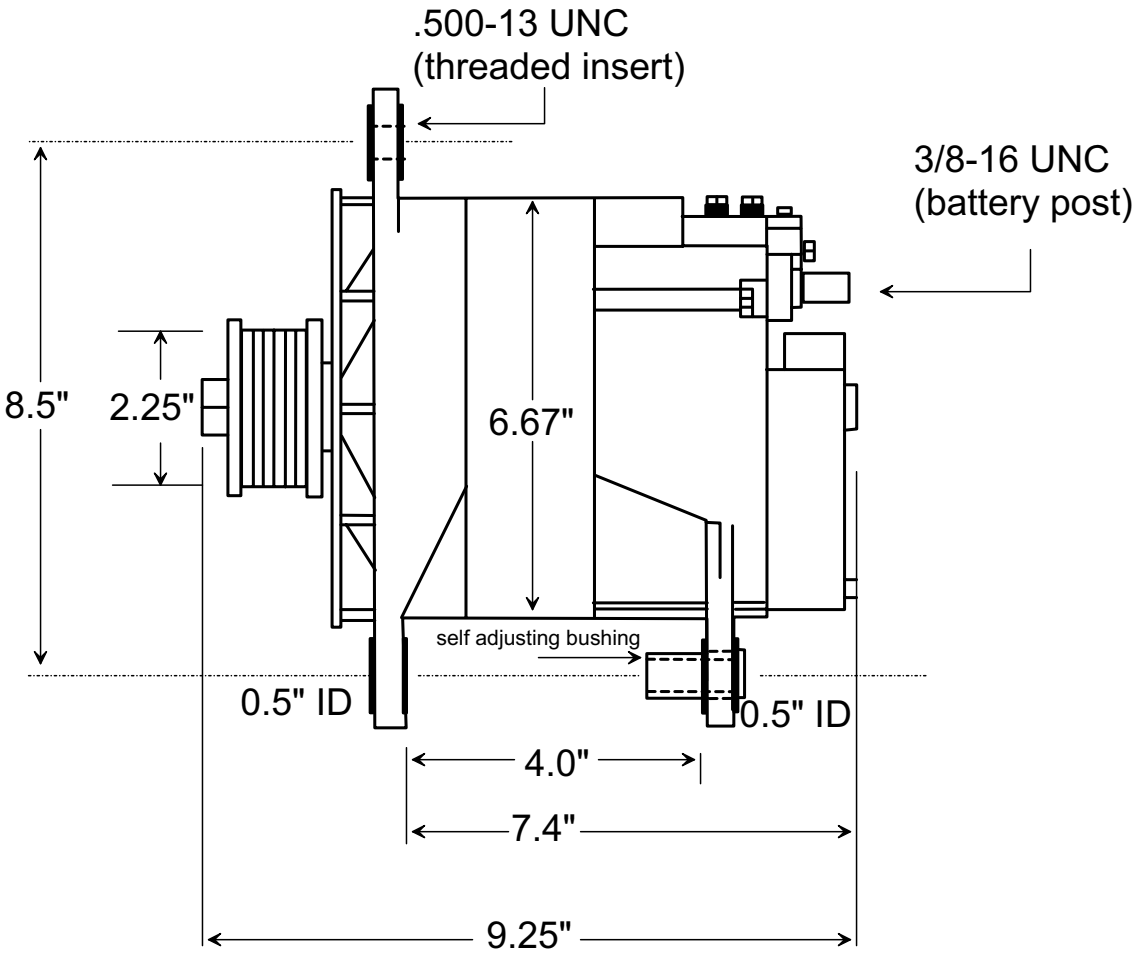

NOTE:

ALL DIMENSIONS ARE LISTED FOR QUICK REFERENCE. CONTACT PENNTEX FOR PRECISE MEASUREMENTS IF REQUIRED FOR BRACKETS OR SPECIAL APPLICATIONS.

PennTex INDUSTRIES, INC.

DATE: 01-07-2008

DRAWING BY DMc.

Scale: None

PX-3S-175 ALTERNATOR FROM PX-317S KIT, 28 VOLT, 175 AMP, J-180 MOUNT